Rohs Compliance

REV	DESCRIPTION	DATE	BY

DIRECTION OF ROTATION

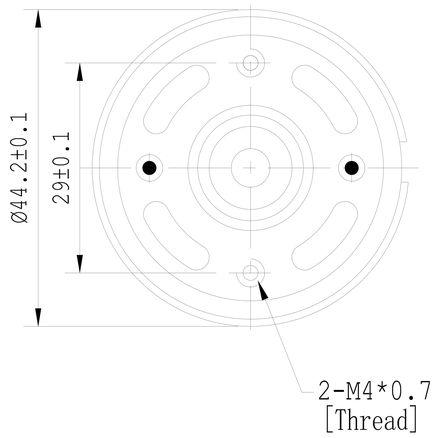

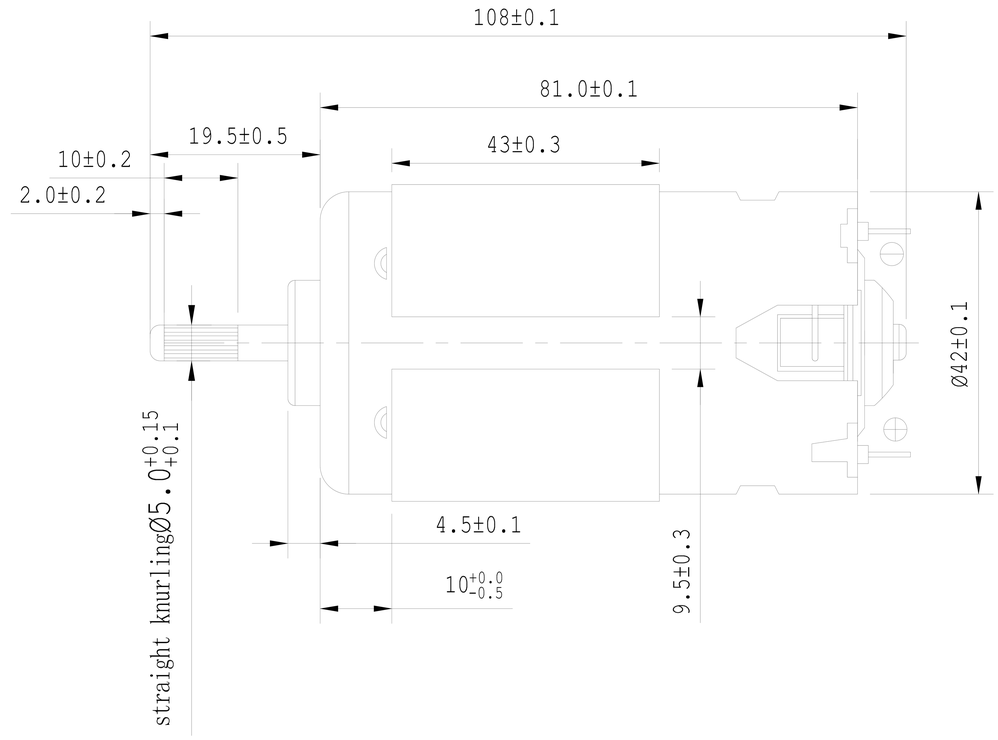

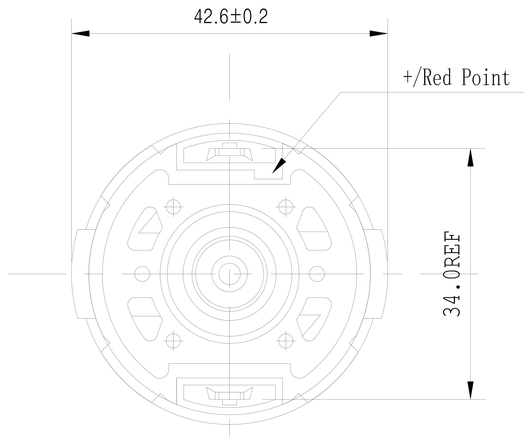

Notes:

1. Voltage with Frequency(电压和频率)：230V/50Hz--DC
2. Rotation(转向):CCW
3. No-load Performance(空载性能)

No-load Speed(空载转速)：17000±10%RPM

No-load Current（空载电流）：<0.3A

No-load Power（空载功率）:<50W

4. load Performance(负载性能)

load Speed(负载转速)：

load Current（负载电流）：

load Power（负载功率）：

5. Withstand Voltage（耐压）:1000V/10Ma/1Sec
6. Lock Current(堵转电流):3.0A±15%
7. Lock Torque(堵转力矩)：9.6KG.cm
8. Lock Power(堵转功率)：700W±15%
9. Noise(噪音)：《75Db (Distance Motor 30CM)

CIRCUIT DIAGRAM:

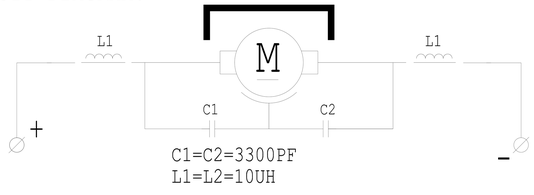

Label content:

OD-7912D230

MADE IN CHINA

GENERAL TOLERANCES ISO 2768-m

Permissible deviations for linear dimensions

Permissible deviations for basic size range

	>0.5 ...3	>3 ...6	>6 ...30	>30 ...120	>120 ...400	>400 ...1000	>1000 ...2000	>200 ...4000
m	±0.1	±0.1	±0.2	±0.3	±0.5	±0.8	±1.2	±2

Permissible deviations for angular dimensions

Permissible deviations for broken edges (external radii chamfer heights)

Permissible deviations for ranges of lengths in millimeters of the shorter side of the angle concerned

Permissible deviations for basic size range

	...10	>10 ...50	>50 ...120	>120 ...400	>400	>0.5 ...3	>3 ...6	...6
m	±1°	±0°30'	±0°20'	±0°10'	±0°5'	±0.2	±0.5	±1

DWN. BY	CHK. BY	APP. BY
Date(yyyymmdd)	Date(yyyymmdd)	Date(yyyymmdd)
MATERIAL:		A4
FINISH:		SCALE 3:1 / NOT SCALE
General Tolerance ISO 2768-1 Class m (Unless specified)	TITLE	OD-7912D230
ALL DIMENSIONS ARE IN MILLIMETRES		
SHENZHEN ODIN IMPORT AND EXPORT CO.,LTD	DWG NO. OD-7912D230	SHEET 1 OF 1
		A